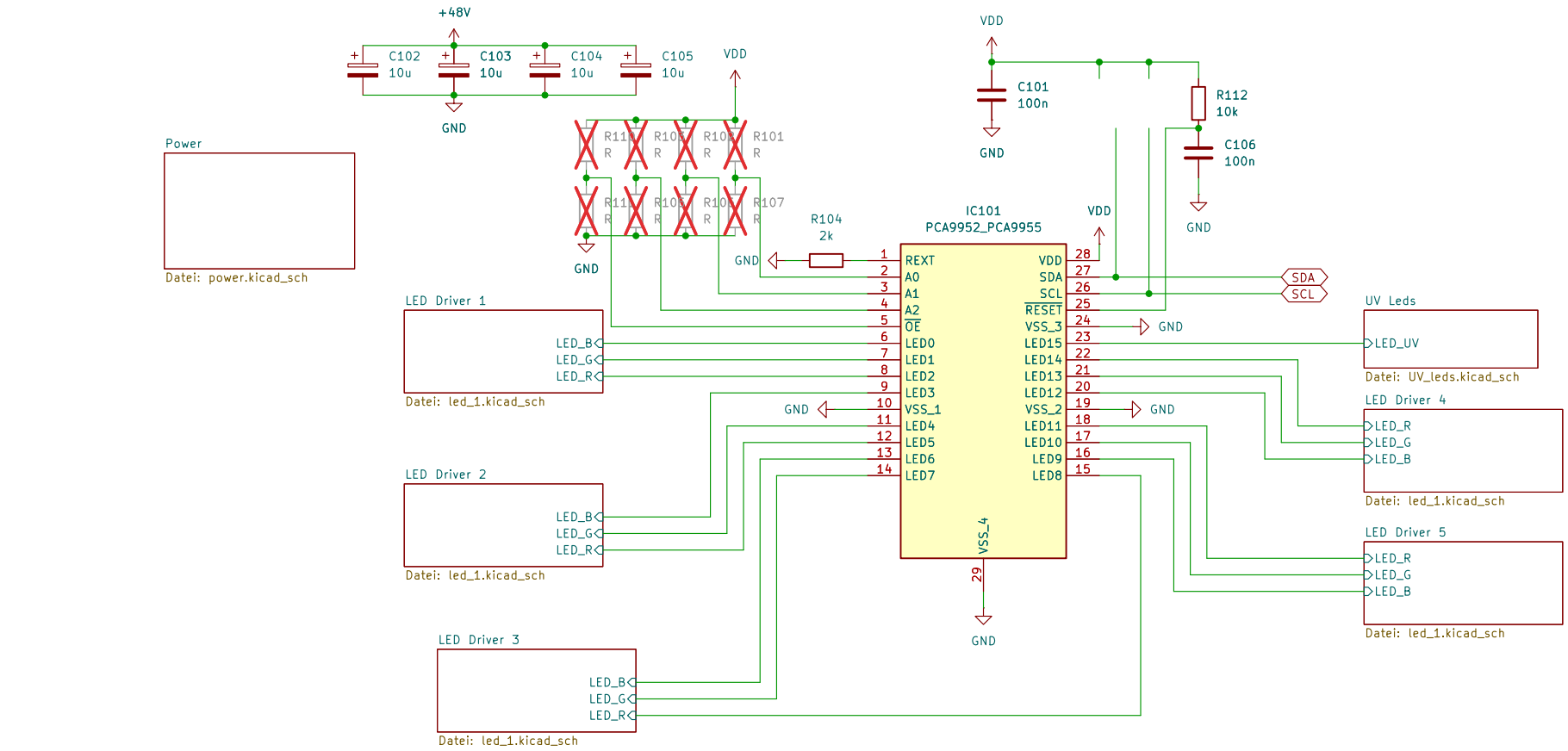


hoffmanndigital

Sheet: /
File: AquaLight_v3.kicad_sch

**Title:**

| Size: A4 | Date: | **Rev:** |
|---|---|---|
| KiCad E.D.A. 10.0.3 | | Id: 1/8 |

hoffmanndigital

Sheet: /LED Driver 2/
File: led_1.kicad_sch

**Title:**

| Size: A4 | Date: | **Rev:** |
|---|---|---|
| KiCad E.D.A. 10.0.3 | | Id: 2/8 |

hoffmanndigital

Sheet: /LED Driver 1/
File: led_1.kicad_sch

**Title:**

| Size: A4 | Date: | **Rev:** |
|---|---|---|
| KiCad E.D.A. 10.0.3 | | Id: 3/8 |

hoffmanndigital

Sheet: /LED Driver 3/
File: led_1.kicad_sch

**Title:**

| Size: A4 | Date: | **Rev:** |
|---|---|---|
| KiCad E.D.A. 10.0.3 | | Id: 4/8 |

hoffmanndigital

Sheet: /LED Driver 4/
File: led_1.kicad_sch

**Title:**

| Size: A4 | Date: | **Rev:** |
|---|---|---|
| KiCad E.D.A. 10.0.3 | | Id: 5/8 |

hoffmanndigital

Sheet: /LED Driver 5/
File: led_1.kicad_sch

**Title:**

| Size: A4 | Date: | **Rev:** |
|---|---|---|
| KiCad E.D.A. 10.0.3 | | Id: 6/8 |

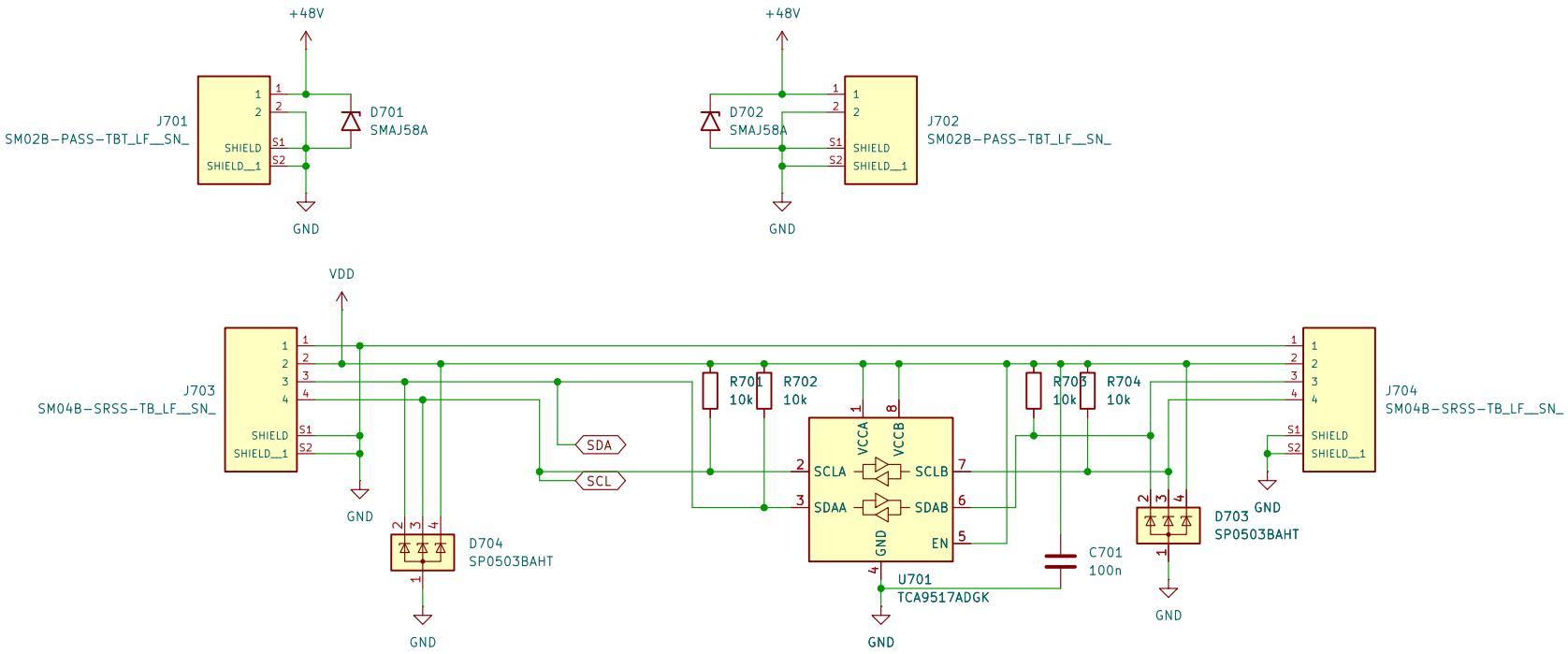


hoffmanndigital

Sheet: /Power/
File: power.kicad_sch

**Title:**

| Size: A4 | Date: | **Rev:** |
|---|---|---|
| KiCad E.D.A. 10.0.3 | | Id: 8/8 |

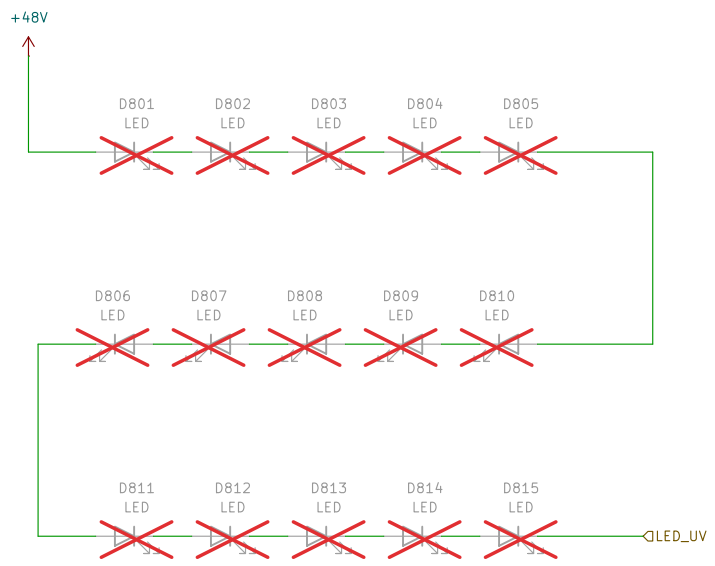


hoffmanndigital

Sheet: /UV Leds/
File: UV_leds.kicad_sch

**Title:**

| Size: A4 | Date: | Rev: |
|---|---|---|
| KiCad E.D.A. 10.0.3 | | Id: 8/8 |